PROPRIETARY NOTE
THIS SPECIFICATION IS THE PROPERTY OF BOE OT AND SHALL NOT BE REPRODUCED OR COPIED WITHOUT THE WRITTEN PERMISSION OF BOE OT AND MUST BE RETURNED TO BOE OT UPON ITS REQUEST

HM150X01-N01
Product Specification (RGB)

BEIJING BOE OPTOELECTRONICS TECHNOLOGY

SPEC. NUMBER	PRODUCT GROUP	REV.	ISSUE DATE	PAGE
S801-5127	TFT-LCD	P0	2018.07.16	1 OF 24

REVISION HISTORY

REV.	ECN NO.	DESCRIPTION OF CHANGES	DATE	PREPARED
P0	-	Initial Release	2017.04.20	Wang Hetao

Contents

No.	Items	Page
1.0	General Description	4
2.0	Absolute Maximum ratings	6
3.0	Electrical specifications.	7
4.0	Optical specifications.	9
5.0	Interface Connection	13
6.0	Signal Timing Specifications	15
7.0	Power Sequence	16
8.0	Mechanical Characteristics	17
9.0	Reliability Test	18
10.0	Handling & Cautions.	19
11.0	Label	20
12.0	Packing information	22
13.0	Mechanical Outline Dimension	23

1.0 GENERAL DESCRIPTION

1.0.1 Introduction

HM150X01-N01 is a color active matrix TFT LCD module using amorphous silicon TFT's (Thin Film Transistors) as an active switching devices. This module has a 15.0 inch diagonally measured active area with XGA resolutions (1024 horizontal by 768 vertical pixel array). Each pixel is divided into RED, GREEN, BLUE dots which are arranged in vertical stripe and this module can display 16.2M colors. The TFT-LCD panel used for this module is adapted for a low reflection and higher color type.

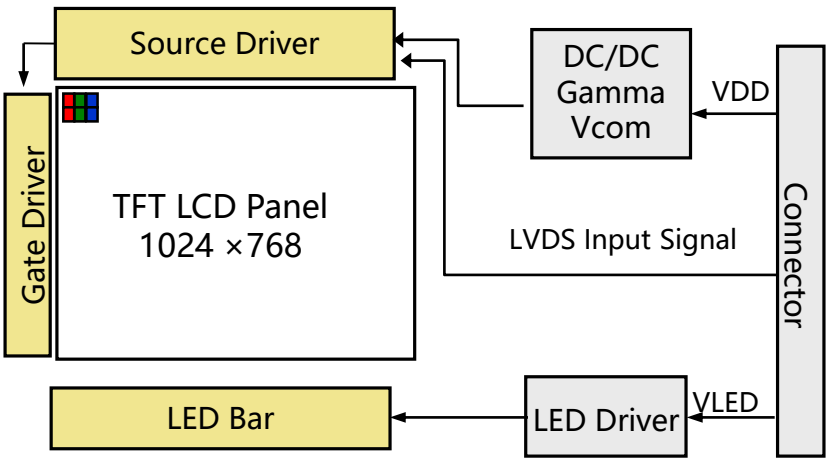

1.0.2 Features

- LED back-light
- LED light bar replaceable
- LVDS interface
- RoHS Compliant

1.0.3 Application

- TFT-LCD Monitor
- Reliability Application

1.0.4 General Specification

< Table 1. General Specifications >

Parameter	Specification	Unit	Remarks
Active area	304.128 (H) × 228.096(V)	mm	
Number of pixels	1024(H) × 768(V)	Pixels	
Pixel pitch	0.297(H) × 0.297 (V)	mm	
Pixel arrangement	RGB Vertical stripe		
Display colors	16.2M	Colors	6bit+FRC
Display mode	Normally White		
Dimensional outline	326.5 (H) × 253.5(V) × 9.7(D) typ.	mm	10max
Weight	TBD	g	
Surface treatment	Haze 25% , 3H		
Back-light	Edge side, 1-LED Lighting Bar Type		27*LED
LED life	50000	hr	min

2.0 ABSOLUTE MAXIMUM RATINGS

The followings are maximum values which, if exceed, may cause faulty operation or damage to the unit. The operational and non-operational maximum voltage and current values are listed in Table 2.

< Table 2. LCD Module Electrical Specifications > [Ta =25±2 ℃]

Parameter	Symbol	Min.	Max.	Unit	Remarks
Back-light Power Supply Voltage	HV_{DDOUT}	-0.3	24	V	
Back-light LED Current	I_{HVDD}	-	-	mA	
Back-light LED Reverse Voltage	V_R	-	40	V	
Operating Temperature	T_{OP}	-20	70	℃	
Storage Temperature	T_{ST}	-20	70	℃	

3.0 ELECTRICAL SPECIFICATIONS

3.0.1 TFT LCD Module

< Table 3. LCD Module Electrical Specifications > [Ta =25±2 ℃]

Parameter	Symbol	Values			Unit	Notes
		Min	Typ	Max		
Power Supply Input Voltage	V_{DD}	3.0	3.3	3.6	V	Note 1
Power Supply Current	I_{DD}	-	520	700	mA	
LED Driver Power Supply Voltage	H_{VDD}	-	12	-	V	Note 2
LED Driver Power Supply Current	I_{HVDD}	-	1.17	-	A	
LED Power Consumption	P_{LED}	-	14	-	W	
Positive-going Input Threshold Voltage	V_{IT+}	-		+100	mV	Vcom = 1.2V typ.
Negative-going Input Threshold Voltage	V_{IT-}	-100		-	mV	
Differential input common mode voltage	V_{com}		1.2		V	V_{IH}=100mV, V_{IL}=-100mV

Notes : 1. The supply voltage is measured and specified at the interface connector of LCM.
The current draw and power consumption specified is for 3.3V at 25 ℃
Max value at Black Pattern

2. Calculated value for reference $I_{LED} \times V_{LED} \div 0.85 = P_{LED}$

3.2 Back-light Unit

< Table 4. LED Driving guideline specifications > Ta=25+/-2°C

Parameter			Min.	Typ.	Max.	Unit	Remarks
LED Life-Time		N/A	50,000	-	-	Hour	IF = 60mA Note 2
Power supply voltage for Back light		V_{LED}	26.1	27.9	29.7	V	
Power supply Current for Back light		I_{LED}	-	180	-	mA	
Power supply for Back light		P_{LED}	4.7	5.1	5.4	W	Note 1
EN Control Level	Backlight on	V_{ENH}	2	-	-	V	EN logic high v oltage
	Backlight off	V_{ENL}	-	-	0.6	V	EN logic low vol tage
PWM Control Level	PWM High Level	V_{PML}	2	-	-	V	
	PWM Low Level	V_{PML}	-	-	0.6	V	
PWM Control Frequency		F_{PWM}	0.12	-	1	KHz	
Duty Ratio		-	5	-	100	%	

Notes : 1. Calculator Value for reference $I_{LED} \times V_{LED} = P_{LED}$

2. The LED Life-time define as the estimated time to 50% degradation of initial luminous under the condition of the ambient temperature of 25℃.

4.0 OPTICAL SPECIFICATION

4.0.1 Overview

The test of view angle range shall be measured in a dark room (ambient luminance ≤ 1lux and temperature = 25±2℃) with the equipment of Luminance meter system (Goniometer system and TOPCON CS2000/CA310) and test unit shall be located at an approximate distance 50cm from the LCD surface at a viewing angle of θ and Φ equal to 0°. We refer to θØ=0 (=θ3) as the 3 o'clock direction (the "right"), θ Ø=90 (= θ12) as the 12 o'clock direction ("upward"), θ Ø=180 (= θ9) as the 9 o'clock direction ("left") and θ Ø=270(= θ6) as the 6 o'clock direction ("bottom"). While scanning θ and/or Ø, the center of the measuring spot on the Display surface shall stay fixed. The luminance, color and uniformity (etc) should be tested by CS2000/CA310. The backlight should be operating for 10 minutes prior to measurement. VDD shall be 3.3 ± 0.3V at 25°C. Optimum viewing angle direction is 6 'clock

<Table 5. Optical Specifications>

Parameter		Symbol	Condition	Min.	Typ.	Max.	Unit	Remark
Viewing Angle range	Horizontal	Θ_3	CR > 10	-	80	-	Deg.	Note 1
		Θ_9		-	80	-	Deg.	
	Vertical	Θ_{12}		-	80	-	Deg.	
		Θ_6		-	80	-	Deg.	
Luminance Contrast ratio		CR	Θ = 0°	400	700	-		Note 2
Luminance of White	Center	Y_w	Θ = 0°	-	1500	-	cd/m^2	Note 3
White Luminance uniformity	9 Points	ΔY9		75	80	-	%	Note 4
Reproduction of color	White	Wx	Θ = 0°	Typ -0.03	0.313	Typ +0.03		Note 5
		Wy			0.329			
Response Time		T_{RT}	Ta= 25° C Θ = 0°	-	8	12	ms	Note 6
Cross Talk		CT	Θ = 0°	-	-	2.0	%	Note 7

Notes : 1. Viewing angle is the angle at which the contrast ratio is greater than 10. The viewing angles are determined for the horizontal or 3, 9 o'clock direction and the vertical or 6, 12 o'clock direction with respect to the optical axis which is normal to the LCD surface (see FIGURE 1).

2. Contrast measurements shall be made at viewing angle of Θ= 0 and at the center of the LCD surface. Luminance shall be measured with all pixels in the view field set first to white, then to the dark (black) state . (see FIGURE 1) Luminance Contrast Ratio (CR) is defined mathematically.

$$CR = \frac{\text{Luminance when displaying a white raster}}{\text{Luminance when displaying a black raster}}$$

3. Luminance of white is defined as luminance values of center of the LCD surface. Luminance shall be measured with all pixels in the view field set first to white. This measurement shall be taken at the locations shown in FIGURE 2 for a total of the measurements per display. The luminance is measured by CS2000/CA310 when the LED current is set at 60mA.

4. The White luminance uniformity on LCD surface is then expressed as : ΔY = Minimum Luminance of 9 points / Maximum Luminance of 9 points (see FIGURE 2).

5. The color chromaticity coordinates specified in Table 5. shall be calculated from the spectral data measured with all pixels first in red, green, blue and white. Measurements shall be made at the center of the panel.

6. The electro-optical response time measurements shall be made as FIGURE 3 by switching the "data" input signal ON and OFF. The times needed for the luminance to change from 10% to 90% is Tr, and 90% to 10% is Td.

7. Cross-Talk of one area of the LCD surface by another shall be measured by comparing the luminance (YA) of a 25mm diameter area, with all display pixels set to a gray level, to the luminance (YB) of that same area when any adjacent area is driven dark. (See FIGURE 4).

4.0.2 Optical measurements

Figure 1. Measurement Set Up

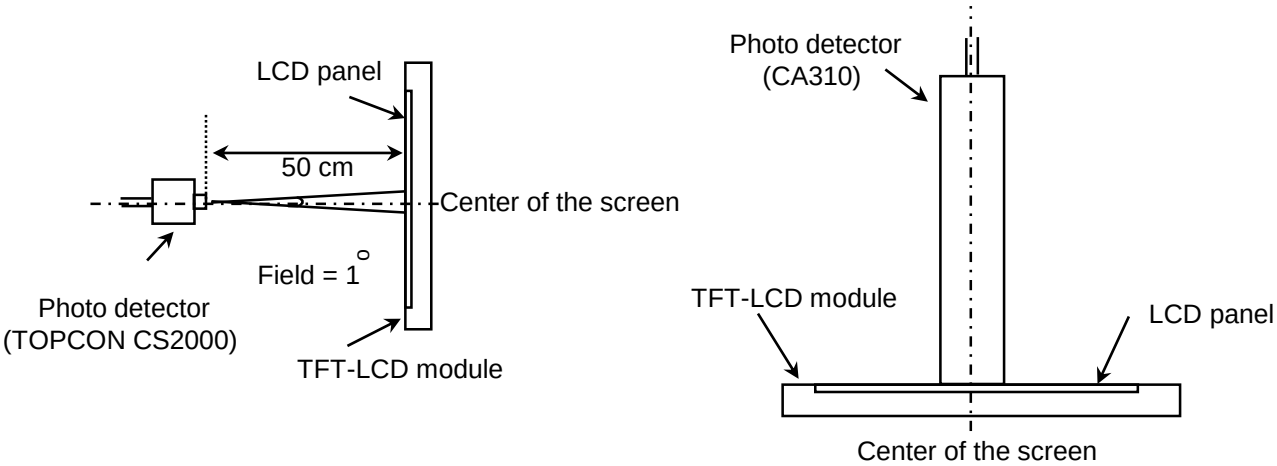

View angel range, uniformity, etc. measurement setup Flicker, measurement setup

Figure 2. White Luminance and Uniformity Measurement Locations (9 points)

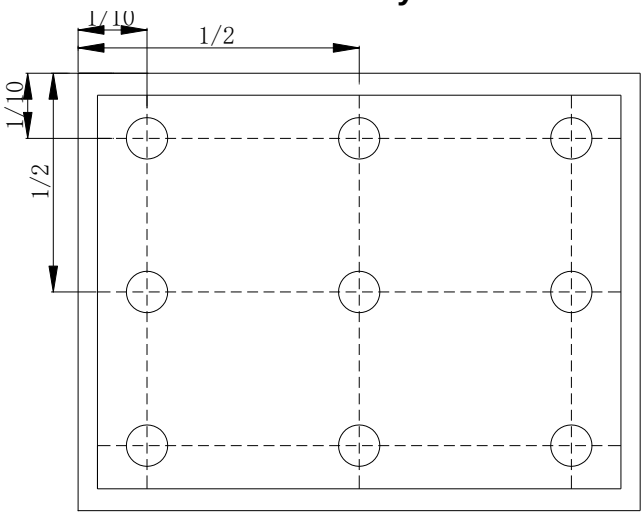

Luminance of white is defined as luminance values of center of the LCD surface. Luminance shall be measured with all pixels in the view field set first to white. This measurement shall be taken at the locations shown in FIGURE 2 for a total of the measurements per display.
The White luminance uniformity on LCD surface is then expressed as : ΔY9 = Minimum Luminance of 9 points / Maximum Luminance of 9points (see FIGURE 2).

Figure 3. Response Time Testing

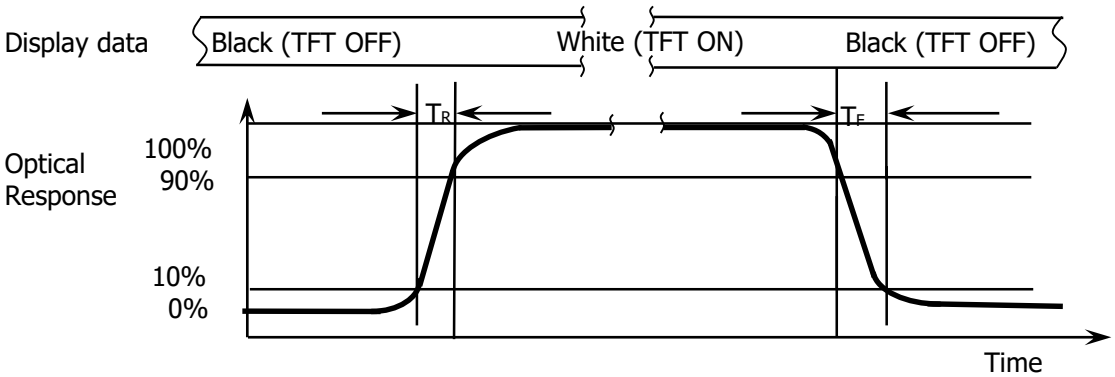

The electro-optical response time measurements shall be made as shown in FIGURE 3 by switching the “data” input signal ON and OFF. The times needed for the luminance to change from 10% to 90% is Tr and 90% to 10% is Td.

Figure 4. Cross Modulation Test Description

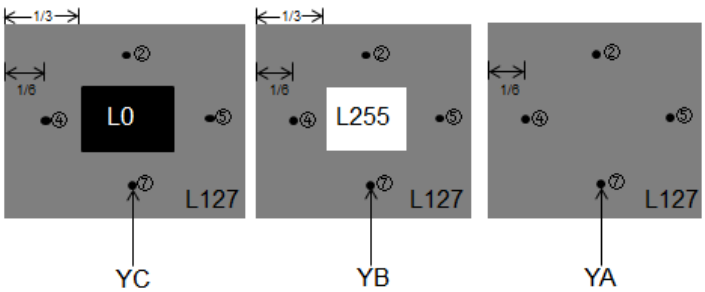

$$\text{White Bar Cross-Talk(\%)} = \left| \frac{YB - YA}{YA} \right| \times 100$$

$$\text{Black Bar Cross-Talk(\%)} = \left| \frac{YC - YA}{YA} \right| \times 100$$

Where:

YA = Initial luminance of measured area (cd/m2)

YB = Subsequent luminance of measured area (cd/m2) @White Bar

YC = Subsequent luminance of measured area (cd/m2) @Black Bar

The location measured will be exactly the same in both patterns

5.0 INTERFACE CONNECTION.

5.0.1 Electrical Interface Connection

The electronics interface connector is DF14H-20P-1.25H.
The LED connector is 3808K-F05N-03L
The connector interface pin assignments are listed in Table 6 and 7.

<Table 6. Pin Assignments for the Interface Connector>

Terminal	Symbol	Functions
Pin No.	Symbol	Description
1	VDD	Power Supply,3.3V(typical)
2	VDD	Power Supply,3.3V(typical)
3	VSS	Ground
4	NC	No Connection
5	RIN0-	-LVDS differential data input
6	RIN0+	+LVDS differential data input
7	VSS	Ground
8	RIN1-	-LVDS differential data input
9	RIN1+	+LVDS differential data input
10	VSS	Ground
11	RIN2-	-LVDS differential data input
12	RIN2+	+LVDS differential data input
13	VSS	Ground
14	CLKIN-	-LVDS differential clock input
15	CLKIN+	+LVDS differential clock input
16	VSS	Ground
17	RIN3-	-LVDS differential data input
18	RIN3+	+LVDS differential data input
19	VSS	Ground
20	SEL 6/8	LVDS 6/8 bit select function control High -> 6bit input mode Low -> 8bit input mode

<Table 7. Pin Assignments for the LED Connector>

Terminal	Symbol	Functions
Pin No.	Symbol	Description
1	NC	No Connection
2	Dimming	PWM Dimming
3	Enable	5V-On / 0V-Off
4	GND	Ground
5	VCC	12V

5.2 Data Input Format

Figure 5. Pixel Format

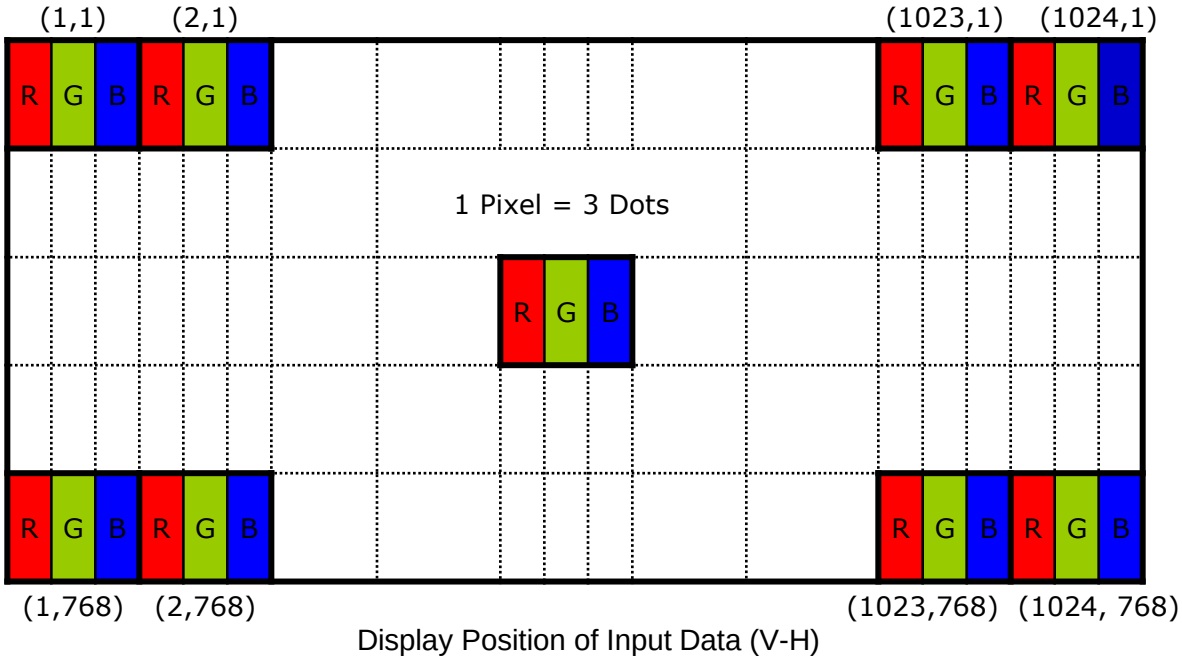

Figure 6. Scan direction

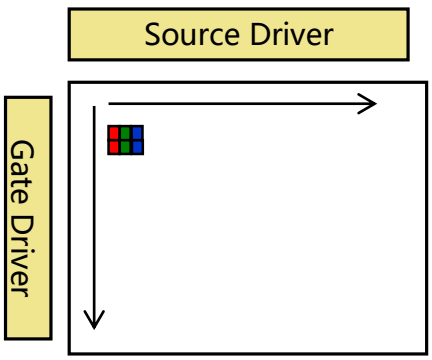

6.0 SIGNAL TIMING SPECIFICATION

6.0.1 The HM150X01-102 is operated by the DE only.

Parameter	Symbol	Value			Unit
		Min.	Typ.	Max.	
DCLK Frequency	fclk	52	58	71	MHz
Horizontal display area	thd	1024			pixel
HSYNC period time	th	1114	1200	1400	pixel
HSYNC blanking	thb+ thfp	90	320	376	pixel
Vertical display area	Tvd	768			H
Frequency	fV	48	60	65	Hz
VSYNC period time	Tv	778	806	845	H
VSYNC blanking	Tvb+ Tvfp	10	38	77	H

7.0 POWER SEQUENCE

To prevent a latch-up or DC operation of the LCD module, the power on/off sequence shall be as shown in below

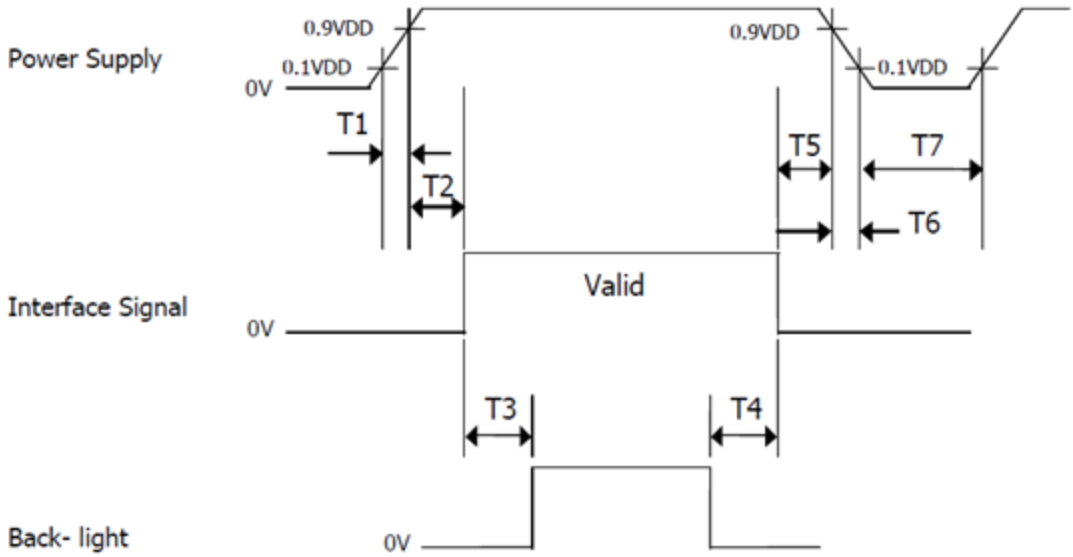

Parameter	Values			Units
	Min	Typ	Max	
T1	0	-	10	ms
T2	0	-	50	ms
T3	200	-	-	ms
T4	500	-	-	ms
T5	0	-	50	ms
T6	0	-	10	ms
T7	500	-	-	ms

8.0 MECHANICAL CHARACTERISTICS

8.0.1 Dimensional Requirements

<Table 8. Dimensional Parameters>

Parameter	Specification	Unit
Active Area	304.128 (H) × 228.096(V)	mm
Number of pixels	1024(H) X768 (V) (1 pixel = R + G + B dots)	
Pixel pitch	0.297(H) × 0.297 (V)	mm
Pixel arrangement	RGB Vertical stripe	
Display colors	16.2M (6bit+FRC)	colors
Display mode	Normally White	
Dimensional outline	326.5 (H) × 253.5(V) × 9.7(D) (Typ.)	10mm (Max)
Weight	TBD	gram
Back-light	Edge side, 1-LED Lighting Bar Type	
LED life	50,000 (Min.)	hr

9.0 RELIABILITY TEST

The Reliability test items and its conditions are shown in below.

<Table 9. Reliability test>

Item		Test condition
High temperature storage		70 ℃, 240 hrs
Low temperature storage		-20℃, 240 hrs
High temperature & high humidity operation		50 ℃, 80%RH, 240hrs
High temperature operation		70 ℃, 240hrs
Low temperature operation		-20℃, 240hrs
Vibration test	Frequency	10/ 200/10 Hz,Sine X/Y/Z Direction
	Gravity / AMP	1.5 G
	Period	±X, ±Y, ±Z 30 min
Shock test	Gravity	50G
	Pulse width	11msec, Half-sine wave
	Direction	±X, ±Y, ±Z
On/Off test		On/5sec, Off/5sec, 3,000 cycles
ESD	Air	± 15KV, 150pF(330) 1sec, 100 points, 1 times/ point
	Contact	± 8KV, 150pF(330) 1sec, 100 points, 1 times/ point

10.0 HANDLING & CAUTIONS

(1) Cautions when taking out the module
- Pick the pouch only, when taking out module from a shipping package.

(2) Cautions for handling the module
- As the electrostatic discharges may break the LCD module, handle the LCD module with care. Peel a protection sheet off from the LCD panel surface as slowly as possible.
- As the LCD panel and back - light element are made from fragile glass material, impulse and pressure to the LCD module should be avoided.
- As the surface of the polarizer is very soft and easily scratched, use a soft dry cloth without chemicals for cleaning.
- Do not pull the interface connector in or out while the LCD module is operating.
- Put the module display side down on a flat horizontal plane.
- Handle connectors and cables with care.

(3) Cautions for the operation
- When the module is operating, do not lose CLK, ENAB signals. If any one of these signals is lost, the LCD panel would be damaged.
- Obey the supply voltage sequence. If wrong sequence is applied, the module would be damaged.

(4) Cautions for the atmosphere
- Dew drop atmosphere should be avoided.
- Do not store and/or operate the LCD module in a high temperature and/or humidity atmosphere. Storage in an electro-conductive polymer packing pouch and under relatively low temperature atmosphere is recommended.

(5) Cautions for the module characteristics
- Do not apply fixed pattern data signal to the LCD module at product aging.
- Applying fixed pattern for a long time may cause image sticking.

(6) Other cautions
- Do not disassemble and/or re-assemble LCD module.
- Do not re-adjust variable resistor or switch etc.
- When returning the module for repair or etc., Please pack the module not to be broken. We recommend to use the original shipping packages.

11.0 LABEL

(1) Product label

1	2	3	4	5	6	7
X X	X	X	X X	1	0 0 X X	X X X X X X

Type designation

No 1. Control Number

No 2. Rank / Grade

No 3. Line classification (BOE OT:A/BC)

No 4. Year (10 : 2010, 11: 2011, …)

No 5. Month (1, 2, 3, …, 9, X, Y, Z)

No 6. Product Identification (FG)

No 7. Serial Number

(3) Box label

Label Size: 110 mm (L) × 56 mm (W)

Contents
Model: **HM150X01-N01**
Q`ty: Module Q`ty in one box
Date: Packing Date
Internal use of Product

13.0 PACKING INFORMATION

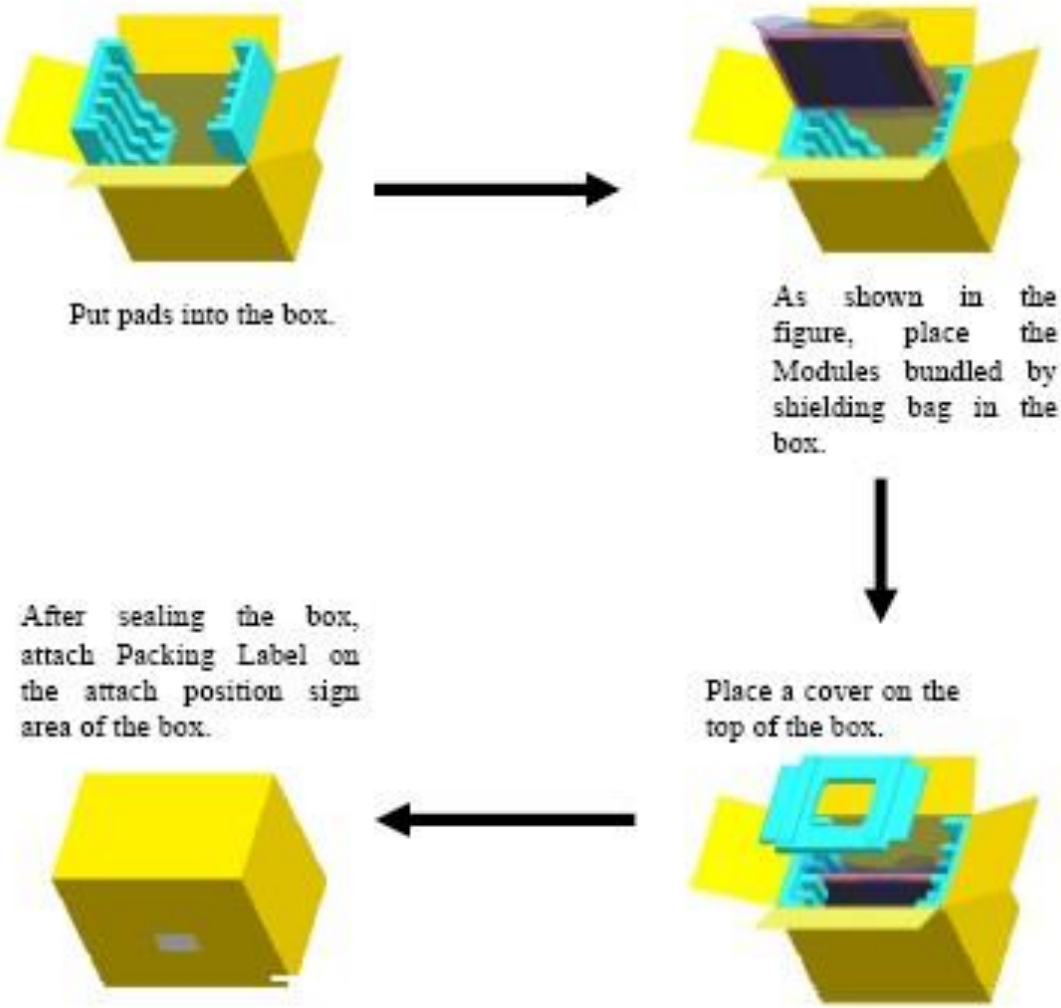

14.0 MECHANICAL OUTLINE DIMENSION

Figure 5. TFT-LCD Module Outline Dimension (Front View)

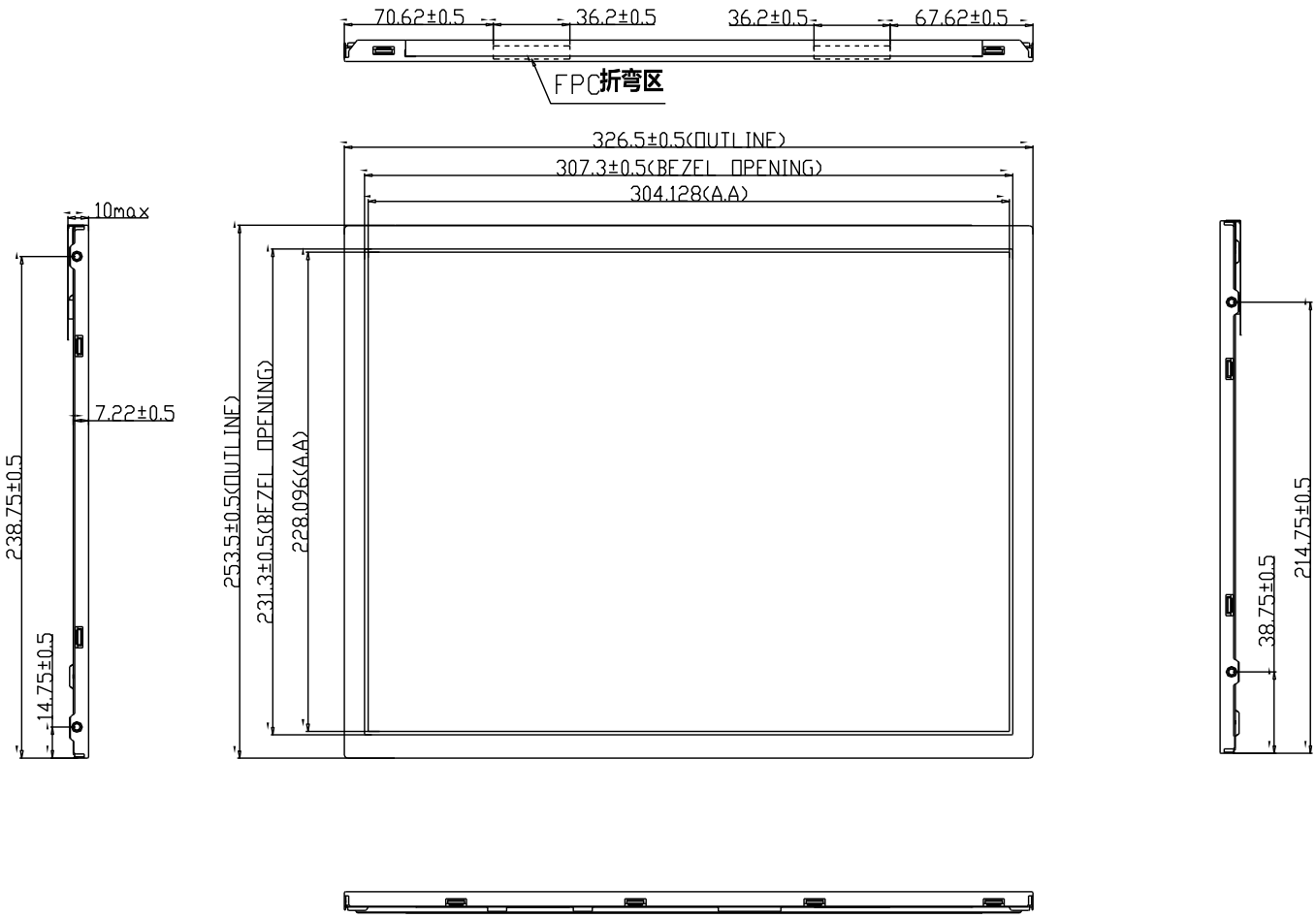

Figure 6. TFT-LCD Module Outline Dimensions (Rear view)

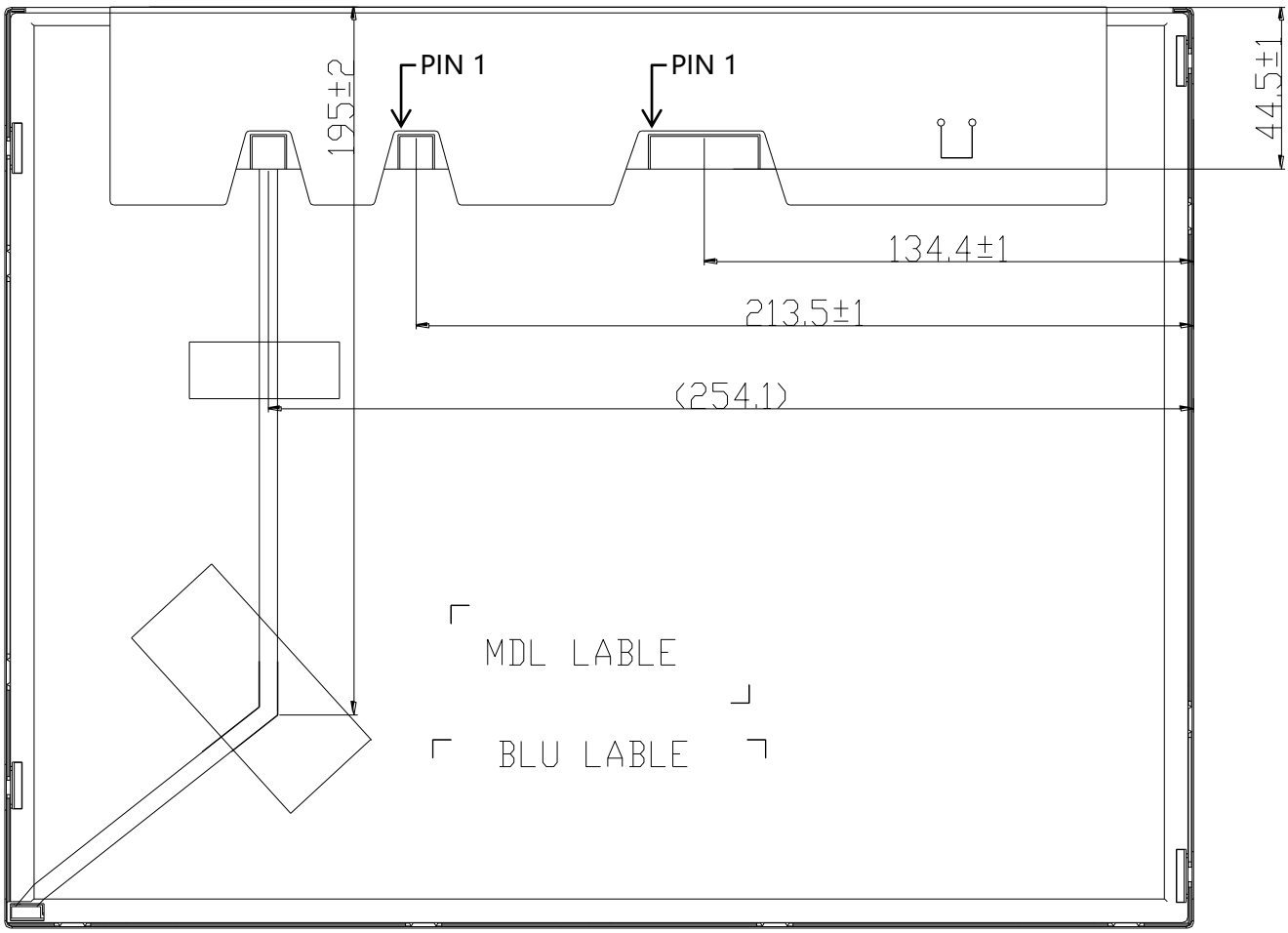
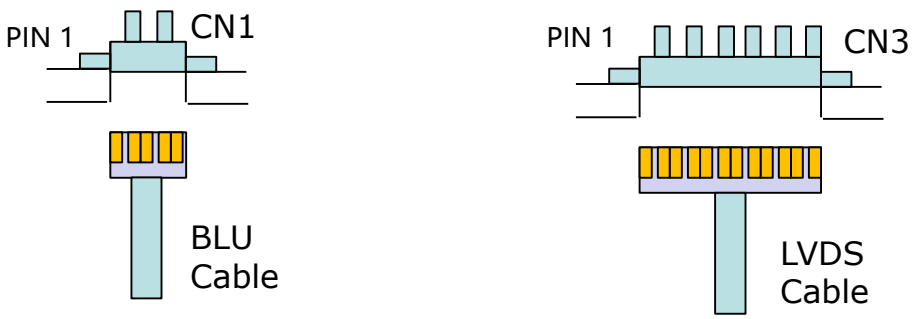
APP. : LVDS &BLU Cable Lead Direction